This Online Learning Seminar is available through a professional courtesy provided by:

Digilock
9 Willowbrook Court
Petaluma, CA 94954
Tel: 707-766-6000
Fax: (800) 989-4221
Toll-Free: (800) 989-0201
Email: sales@digilock.com
Web: www.digilock.com
www.lockup.com
www.celare.com
www.numerislocks.com

START

powered by www.aecdaily.com @AECDAILY

Digilock®
security simplified®



How to Design an Accessible, ADA Compliant Locker Storage Area

©2015 Digilock. The material contained in this course was researched, assembled, and produced by Digilock and remains its property. Questions or concerns about the content of this course should be directed to the program instructor. This multimedia product is the copyright of AEC Daily.

How to Design an Accessible, ADA Compliant Locker Storage Area

Presented by: Digilock
9 Willowbrook Court
Petaluma, CA 94954

Description: Provides an overview of the required design elements of an accessible, ADA compliant locker or personal storage area, with a focus on ease of use, style, lock management, and applicable 2010 ADA Standards for Accessible Design.

To ensure the accuracy of this program material, this course is valid only when listed on AEC Daily's Online Learning Center. Please click here to verify the status of this course.

If the course is not displayed on the above page, it is no longer offered.

The American Institute of Architects · Course No. AEC852 · This program qualifies for 1.0 LU/HSW Hour.

AEC Daily Corporation is a Registered Provider with The American Institute of Architects Continuing Education Systems (AIA/CES). Credit(s) earned on completion of this program will be reported to AIA/CES for AIA members. Certificates of Completion for both AIA members and non-AIA members are available upon request. This program is registered with AIA/CES for continuing professional education. As such, it does not include content that may be deemed or construed to be an approval or endorsement by the AIA of any material of construction or any method or manner of handling, using, distributing, or dealing in any material or product. Questions related to specific materials, methods, and services will be addressed at the conclusion of this presentation.

This course is approved by other organizations. Please click here for details.

AEC Daily Corporation has met the standards and requirements of the Registered Continuing Education Program. Credit earned on completion of this program will be reported to RCEP at RCEP.net. A certificate of completion will be issued to each participant. As such, it does not include content that may be deemed or construed to be an approval or endorsement by the RCEP.



Purpose and Learning Objectives

Purpose: Provides an overview of the required design elements of an accessible, ADA compliant locker or personal storage area, with a focus on ease of use, style, lock management, and applicable 2010 ADA Standards for Accessible Design.

Learning Objectives:

At the end of this program, participants will be able to:

- summarize the history behind the development of the Americans with Disabilities Act (ADA), including effective dates, enforcement policies, and responsibilities
- determine how the 2010 ADA Standards for Accessible Design apply to the design of personal storage lockers and locker areas
- determine how the 2010 ADA Standards for Accessible Design apply to locking devices for personal storage lockers
- describe simple tests that can help to identify accessibility problems in a personal storage and locker room, and
- discuss the design and operation of lockers and locks for accessible, ADA compliant personal storage.



This CEU is registered with the Interior Design Continuing Education Council (IDCEC) for continuing education credits. This credit will be accepted by the American Society of Interior Designers (ASID), International Interior Designers Association (IIDA) and Interior Designers of Canada (IDC).

The content included is not deemed or construed to be an approval or endorsement by IDCEC of any material or construction or any method or manner of handling, using, distributing or dealing in any material or product.

Questions related to specific materials, methods and services should be directed to the instructor or provider of this CEU.

This program is registered for 0.1 CEU value. The IDCEC class-code is: CC-104907-1000.

- This CEU will be reported on your behalf to IDCEC and you will receive an email notification. Please log in and complete the electronic survey for this CEU.
- Certificates of completion will be automatically issued once you have submitted the online survey for this CEU.
- Attendees who do not belong to ASID, IIDA or IDC and do not have a unique IDCEC number will be provided with a Certificate of Completion after this CEU.

How to Use This Online Learning Course

- To **view** this course, use the **arrows** at the bottom of each slide or the up and down arrow keys on your keyboard.
- To **print or exit** the course at any time, press the **ESC** key on your keyboard. This will minimize the full-screen presentation and display the menu bar.
- Within this course is an **exam password** that you will be required to enter in order to proceed with the online examination. Please be sure to remember or write down this exam password so that you have it available for the test.
- To receive a **certificate** indicating course completion, refer to the instructions at the end of the course.
- For **additional information** and post-seminar assistance, click on any of the logos and icons within a page or any of the links at the top of each page.

Table of Contents

Americans with Disabilities Act (ADA)	8
Applications for Personal Storage Lockers	18
Designing ADA Compliant Locker Areas	24
ADA Compliant Lockers and Locks	43
Resources	62

Click on title to view



Americans with Disabilities Act (ADA)

Americans with Disabilities Act (ADA)

The **Americans with Disabilities Act (ADA)** is a comprehensive piece of Federal civil rights legislation that was signed into law on July 26, 1990. It prohibits discrimination against and ensures equal opportunity to persons with disabilities in all areas of public life, similar to those provided to individuals on the basis of race, color, sex, national origin, age, and religion.

The Act defines an individual with a disability as, “a person who has a physical or mental impairment that substantially limits one or more major life activities, a person who has a history or record of such an impairment, or a person who is perceived by others as having such an impairment.” It’s important to note here that the ADA does not specifically name all of the impairments that are covered. Instead of offering a list of a impairments that would “consistently,” “sometimes,” or “usually not” be disabilities, the regulations provide nine rules to help determine what impairments constitute a disability. These rules were included in the ADA Amendments Act of 2008 in direct response to Supreme Court rulings against people with disabilities that focused on whether an individual had a disability, as defined under the1990 law, and not on whether the covered body or facility had discriminated against the individual.

The U.S. Congress signed the **ADA Amendments Act (ADAAA)** into law on September 25, 2008, to clarify the intent and original focus of the ADA, and essentially overturn any court ruling that had discriminated against an individual with a disability seeking protection under the law.

Americans with Disabilities Act (ADA)

To address access and accommodation in a wide array of areas, the current ADA is divided into the following five titles:

- **Title I** – Employment
- **Title II** – State and Local Government
    - all services, programs, and activities provided or made available by local or state governments and their affiliate agencies
- **Title III** – Public Accommodations and Commercial Facilities
    - includes those privately owned
- **Title IV** – Telecommunications
- **Title V** – Miscellaneous Divisions

ADA Standards for Accessible Design

The ADA required the **U.S. Department of Justice (DOJ)** to publish ADA design standards that were consistent with minimum accessibility guidelines published by the U.S. Access Board.

The **1991 ADA Standards for Accessible Design** were printed as Appendix A of the Title III regulation in the Code of Federal Regulations (CFR). The CFR presents the official and complete text of agency regulations in an organized fashion in a single publication. It is divided into 50 Titles representing broad areas that are subject to Federal regulation. Each Title comprises chapters that are assigned to agencies issuing regulations pertaining to a specific area.

The ADA design standards establish design requirements for program accessibility and barrier removal for construction and alterations of facilities that are subject to the law. In 2010, the DOJ revised the regulations for Title II and Title III of the 1990 Act. The revised standards are called the **2010 ADA Standards for Accessible Design**. These enforceable rules went into effect on March 15, 2011 and became mandatory as of March 15, 2012. Facilities that are not in compliance with the DOJ's 2010 revised ADA regulations risk financial penalties and possible legal action.

2010 ADA Standards for Accessible Design

The 2010 ADA Standards for Accessible Design set minimum requirements—both scoping and technical—for newly designed and constructed or altered facilities covered by the law to be readily accessible to and usable by individuals with disabilities.

Scoping requirements (Chapter 2)

- Identify what elements are required to be accessible and how many, e.g., where sinks are provided, at least 5% but no fewer than one of each type provided in each accessible room or space shall comply.
- Are to be applied to all areas of a facility unless exempted, or where scoping limits the number of multiple elements required to be accessible.

Technical requirements (Chapters 3 to 11)

- List the design and construction specifications, e.g., the turning space shall be a space of 60 inches (1525 mm) diameter minimum.
- Based on adult dimensions and anthropometrics, but where building elements are designed for children aged 12 and younger, technical requirements based on children's dimensions and anthropometrics are included.

ADA Accessibility Guidelines (ADAAG)

The **U.S. Access Board** is responsible for writing and updating accessibility design guidelines and standards under the ADA and other laws. Its 1991 **ADA Accessibility Guidelines (ADAAG)** were published soon after the ADA was enacted. In addition to developing the design guidelines, the Access Board promotes compliance and provides technical assistance and training through additional handbooks and guides, a toll-free help line, and public workshops/webinars.

In response to public comments and requests for clarification from governing bodies, and to harmonize with the provisions of the **International Building Code (IBC)**, the Access Board published a comprehensive review and rewrite of the ADAAG in 2004.

Another responsibility of the Access Board is to develop and maintain guidelines for facilities designed, built, altered, or leased with Federal funds as covered by the **Architectural Barriers Act (ABA) of 1968.** Four Federal agencies are responsible for enforcing these guidelines: the Department of Defense, the Department of Housing and Urban Development, the General Services Administration, and the U.S. Postal Service. Revised **ABA Accessibility Guidelines** were also published in 2004.

ADA Compliance: Public and Private Facilities Subject to the Law

As mentioned, on March 15, 2012, compliance with the DOJ's 2010 ADA Standards for Accessible Design for newly constructed and altered facilities covered by the law became mandatory. The ADA Standards apply nationally, in addition to any applicable state or local codes.

Older facilities with design elements that were already in compliance with the 1991 ADA Standards for Accessible Design were not required to fully comply with the 2010 standards until alterations to their design elements were made. However, if an older facility's elements were not in compliance with the 1991 standards, it was required to come up to 2010 compliance.



Facilities and elements required to be identified as accessible must use the international symbol of accessibility.

ADA Compliance: Public and Private Facilities Subject to the Law

Most facilities in the public and private sectors are covered by the ADA, and the building owners and design teams are responsible for ensuring compliance, including:

- government facilities at the state, county, and local levels
- public facilities
  - schools, hospitals, public housing, courthouses, and prisons
- places of public accommodation
  - facilities that affect commerce and fall within twelve categories listed in the statute, including stores and shops, restaurants and bars, sales or rental establishments, service establishments, theaters, places of lodging, recreation facilities, assembly areas, private museums, places of education, and others
  - private businesses that serve the public are included in the twelve categories, regardless of size
- commercial facilities
  - office buildings, factories, warehouses, manufacturing plants, and other facilities whose operations affect trade or business
- transportation facilities, and
- housing.
  - government owned or operated facilities may include public housing, student and faculty housing, employee housing, nursing homes, temporary housing provided in emergencies, and social service facilities, such as homeless shelters and halfway houses
  - places of public accommodation, such as social service establishments and housing at places of education

DOJ ADA Responsibilities

In addition to writing regulations for implementing Titles II and III, under the ADA, the DOJ is required to:

- promote voluntary compliance with the regulations and provide technical assistance through materials or an information line to businesses, governments, and individuals with rights and responsibilities under the law

- file lawsuits in federal court to enforce the ADA and if the DOJ prevails, courts may order compensatory damages and back pay to remedy discrimination. In addition, the DOJ may also obtain civil penalties of up to $55,000 for the first violation and $110,000 for any subsequent violation. Note, the DOJ may not sue a party unless negotiations to settle the dispute have failed

- refer appropriate ADA disputes to the ADA Mediation Program where trained mediators help to resolve a dispute as quickly and effectively as possible at no cost to the parties, and

- upon request of state or local officials, certify that state or local accessibility laws meet or exceed the requirements of the ADA. This process neither delegates ADA enforcement authority to the states nor eliminates an individual's right to seek relief through the federal courts. However, it helps to facilitate compliance and gives building owners and design professionals some assurance that the design and construction of a building will comply with ADA regulations.

ADA Compliance: Locker Areas, Lockers, and Locks

The focus of the remainder of this course is ADA compliance of personal storage locker areas, lockers, and locks. Common, relevant chapters and provisions of the 2010 ADA Standards for Accessible Design are identified throughout, but this course is intended as a guide only.

Please consult your local jurisdiction to determine which ADA provisions and building codes are applicable to your building project, since the requirements for new construction or alterations, for public and common use, and employee work areas, in federal, public, or private facilities vary, and specific requirements not mentioned here may be applicable. ADA compliance is mandatory and a thorough review of the design standards is required.

Although certain areas in a building, e.g., areas used only by employees for work, are not required to be fully accessible, the Access Board recommends considering designing such areas to be accessible, to maximize opportunities for accessibility, and provide accessible elements whenever possible.



Applications for Personal Storage Lockers

Where Are Personal Storage Lockers Installed?

Personal storage locker installations are designed to meet the personal storage needs of many industries and facility types. They are not only used to securely store personal belongings, but due to their design flexibility and size, they are also used to secure equipment and tools, parcels, supplies, and controlled products, etc.



Where Are Personal Storage Lockers Installed?

Healthcare facilities

- hospitals
    - patient temporary storage
    - lab equipment storage
- health centers/clinics
    - in/out patient temporary storage
- pharmacies
    - controlled product storage
- nursing homes
    - uniform exchange





Where Are Personal Storage Lockers Installed?

Commercial facilities

- fitness centers, spas, and country clubs
    - member assigned lockers
- retail centers
    - shopper rental
    - secure package delivery
- public restrooms
    - public temporary storage
- community centers and arenas
    - public temporary storage
- public cell phone and tablet charging stations





Where Are Personal Storage Lockers Installed?

Education facilities

- schools and universities
    - student assigned personal and gym lockers

Employee personal storage

- office spaces
- manufacturing plants
- retail stores
- restaurants
- construction sites
- healthcare facilities
- police stations
- commercial facilities



Where Are Personal Storage Lockers Installed?

Hospitality and tourism

- hotels
- resorts
- theme parks
- aquatic centers

Transportation facilities

- airports
    - public temporary storage
    - public cell phone and tablet charging stations
- bus depots
- train stations





Designing ADA Compliant Locker Areas

Locker Area Design Considerations

This section of the course highlights design considerations for planning an accessible, personal storage locker area.

- Location
  - signage
  - accessible route
  - accessible entrance
- Layout
  - space requirements
  - reach ranges
  - density, placement, and configuration of locker cluster(s)
  - benches
- Operable parts
- Interior design of locker
  - hooks and shelves



Accessible Route

How well an individual can find and access a locker area depends on the design and management of a facility. Lighting levels, signage, wayfinding, and travel distances are especially important considerations in determining how easy it is for a person to locate a locker area.

In many facilities, personal storage lockers are logically located, e.g., dedicated change/locker rooms in sports/fitness centers, in or near a washroom area in a shopping mall, or in a hallway in a school. In other buildings, such as a hospital, manufacturing plant, or an office tower, a locker area may not be in a location that can easily be determined by a patient, employee, or visitor to the building.

Good, clear signage and lighting can convey the layout of a building and help a user to locate the locker area. Signs must be permanent, mounted at a reasonable height, use appropriately sized characters, and direct people to accessible routes and entrances to the locker area.

Accessible Route

Chapter 2: Scoping Requirements

206 Accessible Routes

- Facilities must provide at least one accessible route connecting all accessible rooms, elements, and spaces within a site. An accessible route may comprise walking surfaces, doorways, ramps, curb ramps, elevators, and, where permitted, platform lifts.

In some locker installations, providing an accessible route to the locker area for a person with a disability may be challenging since the inclusion of a locker area in the building's design came about as an afterthought or later when building use changed, or when the number of occupants increased and additional personal locker storage was required. These types of scenarios commonly lead to locker rooms being situated in inconvenient locations.

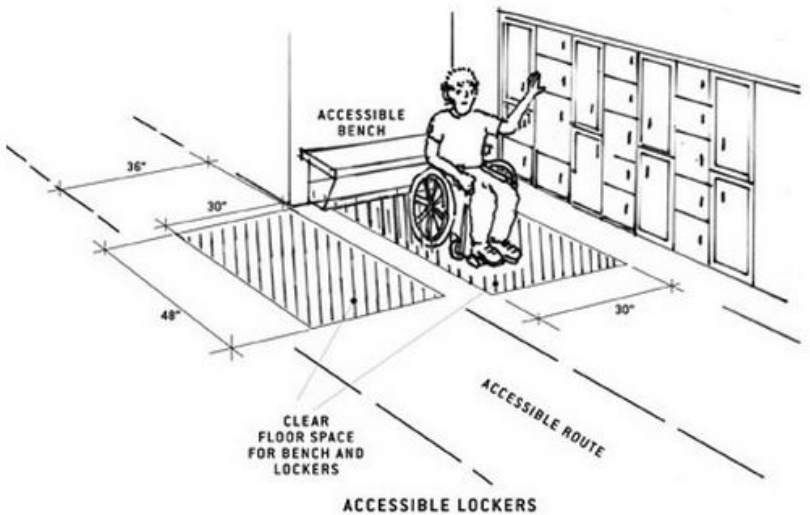

Accessible Route

Chapter 4: Accessible Routes

403 Walking Surfaces

- **403.5 Clearances.** The clear width of walking surfaces shall be 36 inches (915 mm) minimum. It can reduce to 32 inches (815 mm) at points, such as doorways, for a maximum distance of 24 inches (610 mm). Greater clearance is required for 180 degree turns around narrow obstructions and for wheelchair turning space. The minimum clearance cannot be reduced by any elements, including handrails or protruding objects.

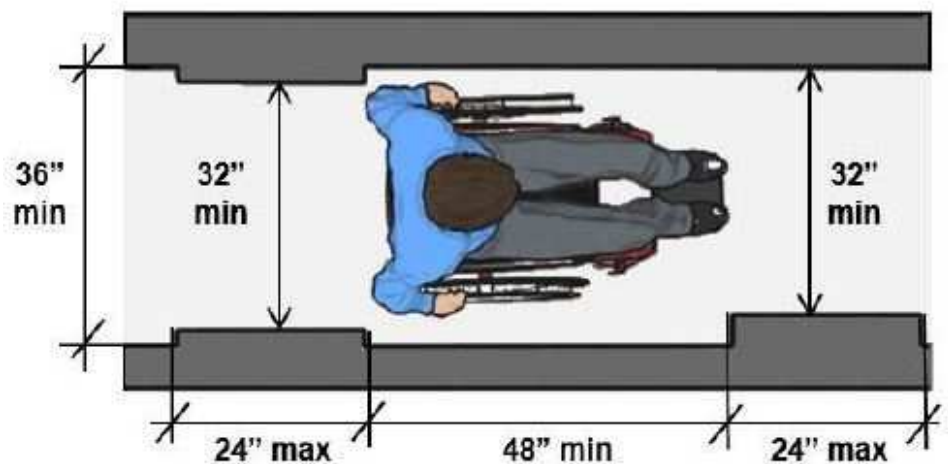

Accessible Route Through the Entrance

Chapter 2: Scoping Requirements

Section 206.5 Doors, Doorways, and Gates.

- Compliance is required for doors, doorways, and gates providing user passage on accessible routes.
- At least one accessible door, doorway, or gate serving each accessible room, space, and entrance must comply.

Chapter 4: Accessible Routes

404.2 Manual Doors, Doorways, and Manual Gates.

- **404.2.3 Clear Width.** Door openings shall provide a clear width of 32 inches (815 mm) minimum. Clear openings of doorways with swinging doors shall be measured between the face of the door and the stop, with the door open 90 degrees. Openings more than 24 inches (610 mm) deep shall provide a clear opening of 36 inches (915 mm) minimum.

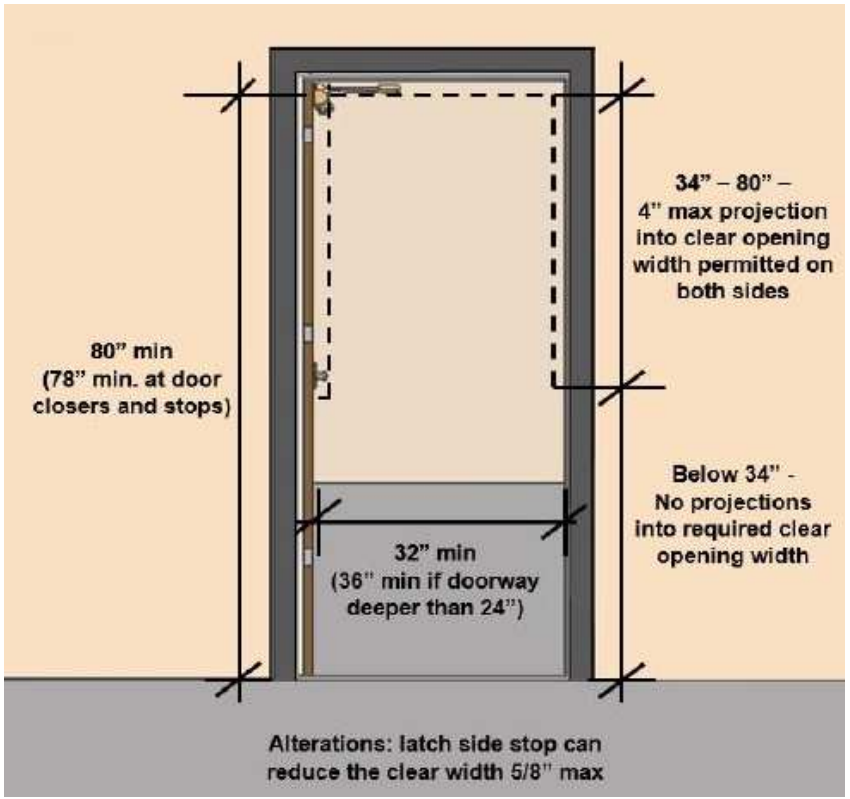

Accessible Route Through the Entrance

Chapter 4: Accessible Routes

404.2 Manual Doors, Doorways, and Manual Gates.

- **404.2 .4 Maneuvering Clearances.** Required maneuvering clearances provide space for opening and proceeding through doors, doorways, and gates using wheelchairs and other mobility aids.
- Maneuvering clearances are specified according to direction of approach, swing of doors, and in some cases the presence of a closer or latch.
- Maneuvering clearances shall extend the full width of the doorway and the required latch side or hinge side clearance.
- Maneuvering clearances must be free of protrusions the full height (80 inches minimum) and changes in level (other than thresholds).





Specific Spaces and Occupancies

The ADA Standards include scoping requirements specific to certain types of spaces and facilities that apply based on the intended use and design.

Spaces with multiple uses must meet all applicable requirements for each use.

Chapter 2, scoping provisions for specific spaces and occupancies address:

- **222 Dressing, Fitting, and Locker Rooms**
- **225 Storage**



Accessible Locker Rooms and Storage

Chapter 2: Scoping Requirements

222 Dressing, Fitting, and Locker Rooms

- **222.1 General.** Where dressing rooms, fitting rooms, or locker rooms are provided, at least 5 percent, but no fewer than one, of each type of use in each cluster provided shall comply with 803.
- **222.2 Coat Hooks and Shelves.** Where coat hooks or shelves are provided in dressing, fitting, or locker rooms without individual compartments, at least one of each type shall comply with 803.5. Where coat hooks or shelves are provided in individual compartments at least one of each type complying with 803.5 shall be provided in individual compartments in dressing, fitting, or locker rooms required to comply with 222.1.

Accessible Locker Rooms and Storage

225 Storage

- **225.2.1 Lockers.** Where lockers are provided, at least 5 percent, but no fewer than one of each type (full, half, quarter, etc.), shall comply with 811.
- **225.3.1 Dispersion.** Individual self-service storage spaces shall be dispersed throughout the various classes of spaces provided. Where more classes of spaces are provided than the number required to be accessible, the number of spaces shall not be required to exceed that required by Table 225.3. Self-service storage spaces complying with Table 225.3 shall not be required to be dispersed among buildings in a multi-building facility.

Table 225.3 Self-Service Storage Facilities

Total Spaces in Facility	Minimum Number of Spaces Required to be Accessible
1 to 200	5 percent, but no fewer than 1
201 and over	10, plus 2 percent of total number of units over 200

Accessible Locker Rooms and Storage

Chapter 8: Special Rooms, Spaces, and Elements

803 Dressing, Fitting, and Locker Rooms

- **803.2 Turning Space.** Turning space complying with 304 shall be provided within the room.
- **803.3 Door Swing.** Doors shall not swing into the room unless a clear floor or ground space complying with 305.3 is provided beyond the arc of the door swing.
- **803.4 Benches.** A bench complying with 903 shall be provided within the room.
- **803.5 Coat Hooks and Shelves.** Coat hooks provided within the room shall be located within one of the reach ranges specified in 308. Shelves shall be 40 inches (1015 mm) minimum and 48 inches (1220 mm) maximum above the finish floor or ground.

811 Storage

- **811.2 Clear Floor or Ground Space.** A clear floor or ground space complying with 305 shall be provided.
- **811.3 Height.** Storage elements shall comply with at least one of the reach ranges specified in 308.
- **811.4 Operable Parts.** Operable parts shall comply with 309.

Space Around the Lockers

Locker areas are commonly crowded places in which every individual requires their own space. Stacked locker units, narrow aisles, open locker doors, and bench tops used as storage areas instead of seating can add to the congestion and inefficiency of the space.

The ADA requires sufficient space around the assigned accessible lockers.

Chapter 3: Building Blocks

304 Turning Space

- **304.3.1 Circular Space.** The turning space shall be a space of 60 inches (1525 mm) diameter minimum.
- **304.3.2 T-Shaped Space.** The turning space shall be a T-shaped space within a 60 inch (1525 mm) square minimum with arms and base 36 inches (915 mm) wide minimum.

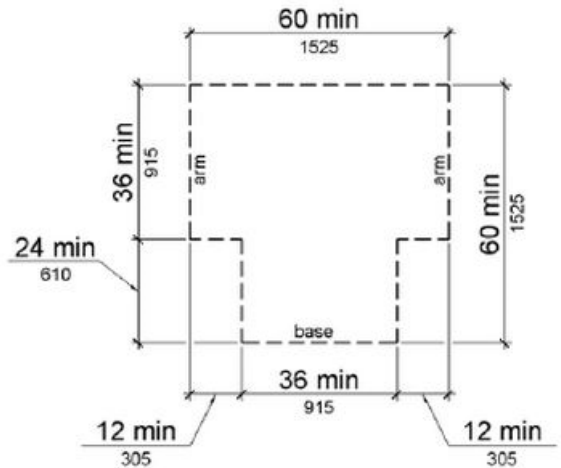

T-shaped space

Space Around the Lockers

Chapter 3: Building Blocks

305 Clear Floor or Ground Space

- The clear floor or ground space shall be 30 inches (760 mm) minimum by 48 inches (1220 mm) minimum.
- Unless otherwise specified, clear floor or ground space shall be positioned for either forward or parallel approach to an element.

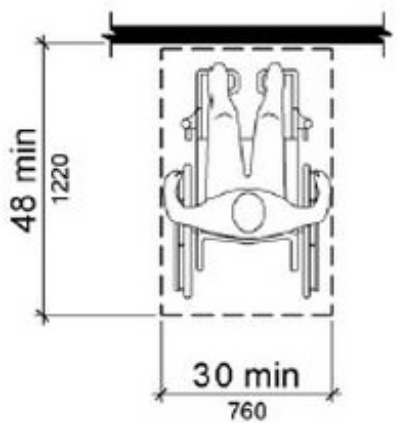

Forward approach

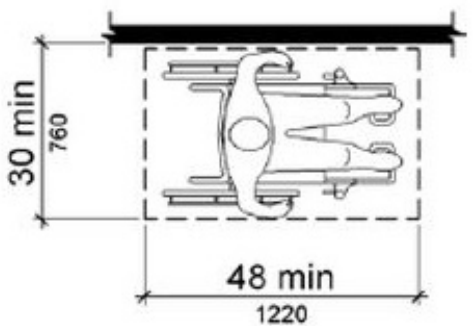

Parallel approach

Reach Range

Chapter 3: Building Blocks

308 Reach Ranges

- **308.2.1 Unobstructed.** Where a forward reach is unobstructed, the high forward reach shall be 48 inches (1220 mm) maximum and the low forward reach shall be 15 inches (380 mm) minimum above the finish floor or ground.
- The maximum reach depth for this range is 10 inches (254 mm) measured from the available clear floor space.

- **308.3.1 Unobstructed.** Where a clear floor or ground space allows a parallel approach to an element and the side reach is unobstructed, the high side reach shall be 48 inches (1220 mm) maximum and the low side reach shall be 15 inches (380 mm) minimum above the finish floor or ground.

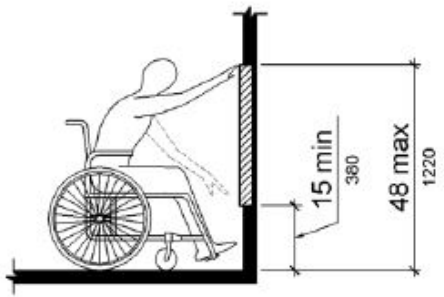

Unobstructed forward reach

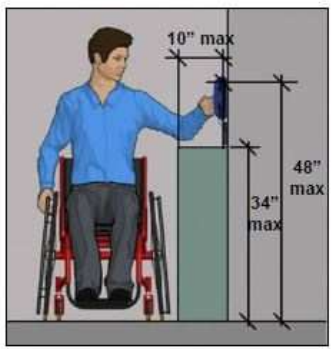

Maximum reach depth

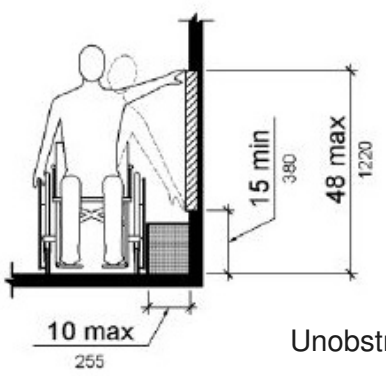

Unobstructed side reach

Reach Range

Chapter 3: Building Blocks

308 Reach Ranges

- The maximum high reach is reduced to 46 inches (1168 mm) when the reach over an obstruction is deeper than 10 inches (254 mm) (to a maximum of 24 inches (610 mm)). Obstructions at side reaches are limited to a height of 34 inches (864 mm).

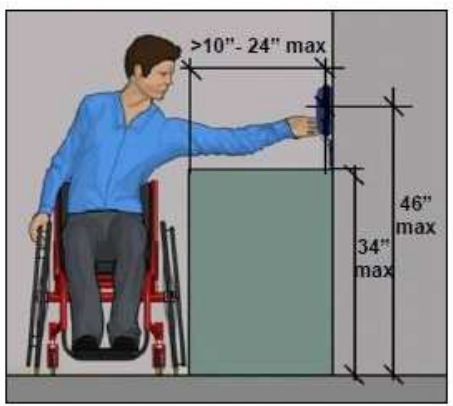



Operable Parts

ADA compliance is required for the operable portions of fixed elements such as cabinet hardware.

Chapter 3: Building Blocks
309 Operable Parts

- **309.4 Operation.** Operable parts must be usable with one hand and not require:
    - tight grasping, pinching, or twisting of the wrist, or
    - more than 5 pounds of force (lbf) to operate.

Parts that can be operated without hand or finger dexterity, fine motor movement, or simultaneous actions provide easier access and accommodate a broader range of users.

Operable Parts: Lockers and Locks

Push Plates, Buttons, and Bars

Push-activated controls not requiring more than 5 lbf (pound-force) are acceptable. Buttons that are raised or flush are easier to use than those that are recessed.

Handles, Pulls, and Knobs

Standard U-shaped pulls and lever-shaped handles are acceptable. Stationary knobs with a shape that can be loosely gripped also are acceptable. Knobs that require a full hand grip and turning, including round door knobs, do not comply because they require twisting of the wrist.

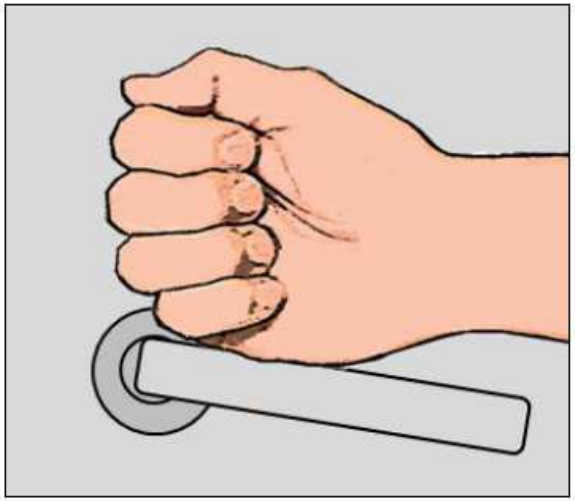

Operability with a closed fist is a reliable test of usability, but not required by the ADA standards.

Operable Parts: Lockers and Locks

Latches and Locks

Latches and locks with small parts that must be manipulated can be difficult to use and will not comply if pinching is necessary. However, non-fixed portions of locks and other operable parts, such as keys and access cards, are not required to comply (but those that do not require pinching or turning provide better access). Hardware that does not require simultaneous actions is better, but some types, such as handles with thumb latches are acceptable.

Controls and Switches

Dials and other controls that can be turned with the fingers but not the full hand can be used if they do not require twisting of the wrist or pinching. Flip switches and similar controls are acceptable, though push plate types can provide easier access.

Locker Room Benches

Chapter 8: Special Rooms, Spaces, and Elements

803.4 Benches.

- Accessible benches, complying with 903, are required in dressing, fitting, and locker rooms.
- Accessible benches should be located adjacent to the accessible lockers.
- Benches must have a clear floor space positioned to allow persons using wheelchairs or other mobility devices to approach parallel to the short end of a bench seat.

Section 903.5 requires dressing room bench seats to be installed so that they are at the same height as a typical wheelchair seat, 17 inches (430 mm) to 19 inches (485 mm). However, wheelchair seats can be lower than dressing room benches for people of short stature or children using wheelchairs.

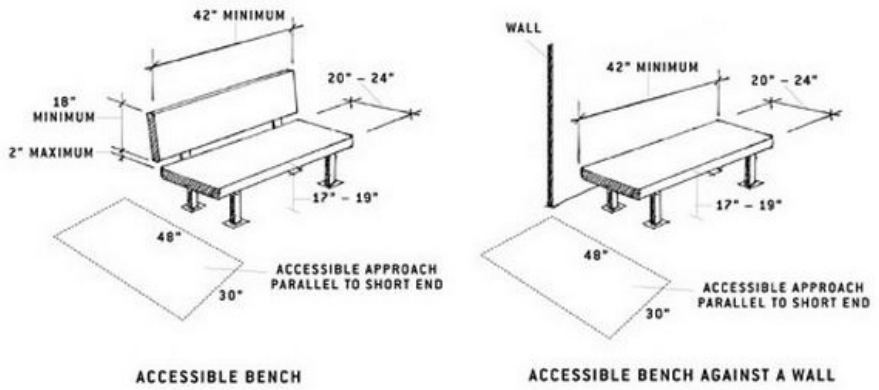



ADA Compliant Lockers and Locks

Design Considerations: Personal Storage Lockers

Design considerations for personal storage lockers include:

- size
- appearance
- durability
- noise level
- ventilation, and
- design flexibility.

Size

It is important for the locker to be adequately sized to accommodate the storage needs of the user. Today's locker designs are sized to store items as small as a cell phone or are large enough to store luggage or several pieces of sports equipment. Large lockers used to store small objects waste valuable floor space, but lockers that are too small for their intended use frustrate users.



Design Considerations: Personal Storage Lockers

Appearance
Accessible lockers should use clearly visible and embossed numbers that can be read by sight or touch, and the international symbol of accessibility must be noticeable on each accessible locker.

Depending on the manufacturer, a variety of colors and finishes may be available to blend in with a facility's branding or a team's color scheme, but note that the use of color in the locker bank may also help an individual with a sight impairment to locate an accessible locker.



Design Considerations: Personal Storage Lockers

Durability
The materials used to manufacture lockers include wood, metal, plastic, or plastic laminate. The material selected may depend on the application, who is using the locker, and what needs to be stored. In addition, lockers installed in high traffic areas and subject to daily/high use for many years need to be dent and scratch resistant. Doors made from polycarbonate provide secure yet visible storage of personal belongings and products.

Noise level
In many facilities, especially schools and employee areas, the locker area is a hub of activity where belongings are moved around and social interactions take place. The construction of the locker, including the materials, hinge, handle, and locking mechanism used, will affect the noise levels caused by the frequent opening and closing of locker doors.



Design Considerations: Personal Storage Lockers

Ventilation
Airflow within a locker can reduce problems associated with odors, moisture, and humidity. Louver vents allow air to pass in and out of the locker while still providing full concealment, whereas locker doors with square perforations provide partial concealment of a locker's contents with full ventilation and security.



Louver vents



Square perforations



Ventilated back panels

Design Considerations: Personal Storage Lockers

Design flexibility
As building use changes and occupant populations increase, flexibility in locker design benefits both new and retrofit projects. Locker clusters that can be reconfigured if a facility's user needs change means the lockers can be moved easily and re-used, which lowers the cost of a renovation.

Doors that can be updated or changed to suit a new tenant's choice of aesthetics also lower the renovation expense. In addition, if the doors can be replaced or upgraded, so can the locks, providing facility management an opportunity to review the security performance of the locker area as well as its aesthetics.



Locker Configuration

Depending on the manufacturer, lockers may be available in tiers with one to six lockers, in single, double, or triple configurations.

To be ADA compliant, at least 5% of each type of locker must be accessible.

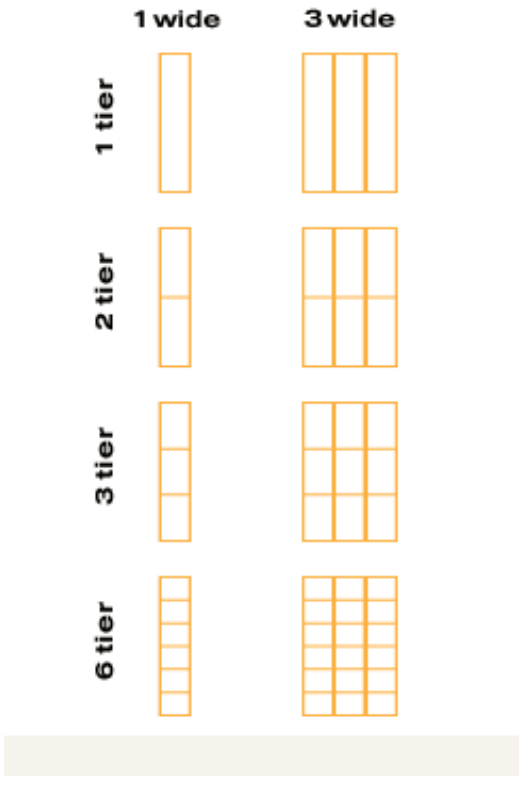

Example: Locker Configuration





Example: Locker Configuration





Locker Placement

An accessible locker must be a minimum of 24 inches (610 mm) away from an adjacent wall and have a clear floor space of 30 inches (762 mm) by 48 inches (1220 mm).

The area in front of the locker must have a 60 inch (1525 mm) clearance to allow for a wheelchair to turn.

In a locker room, an accessible bench must be located adjacent to the accessible lockers.

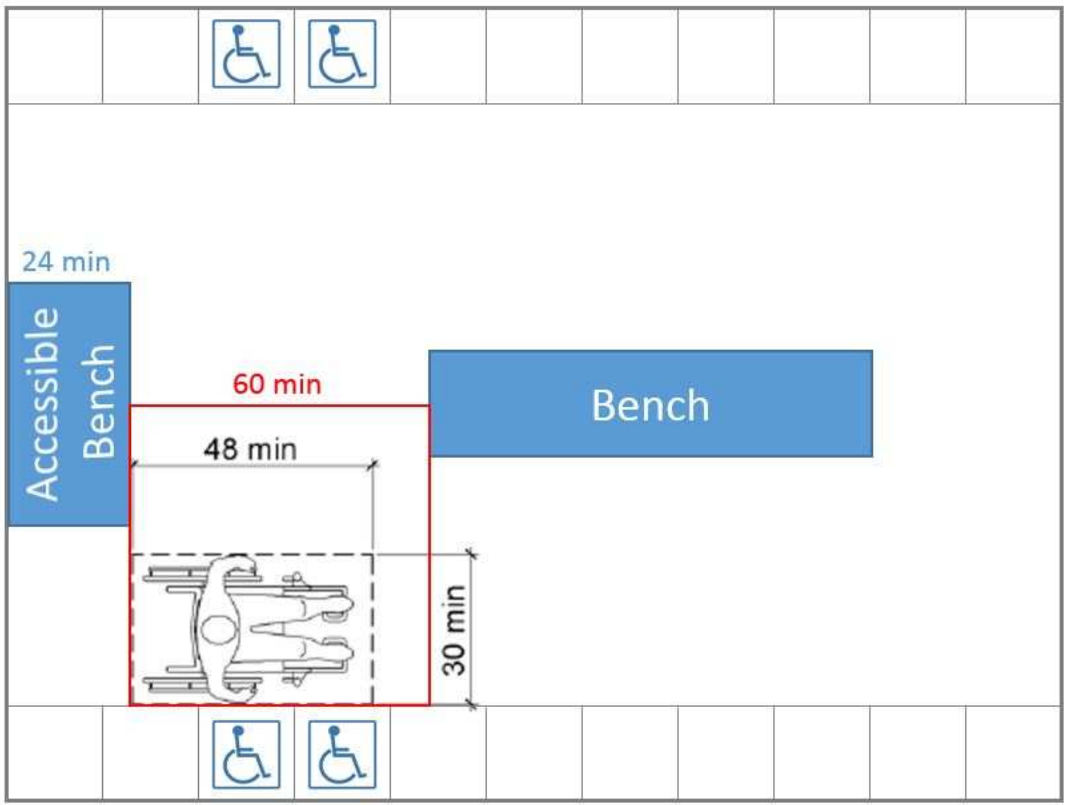

Locker Design

ADA compliant lockers must be no more than 15 inches (380 mm) off the finish floor. If the locker sits on the floor, there must be a shelf no lower than 15 inches from the finish floor. Locking devices, shelves, and coat hangers must be located no higher than 48 inches (1220 mm) from the finish floor.

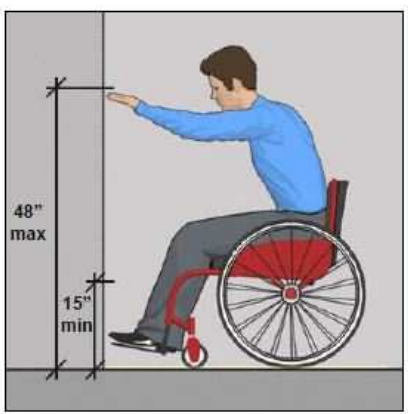

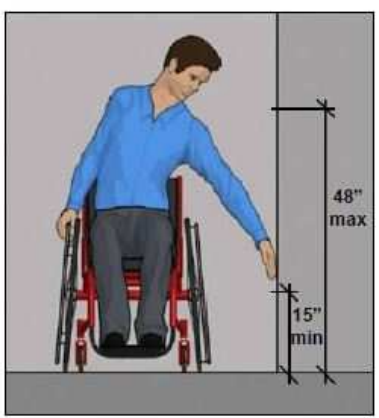

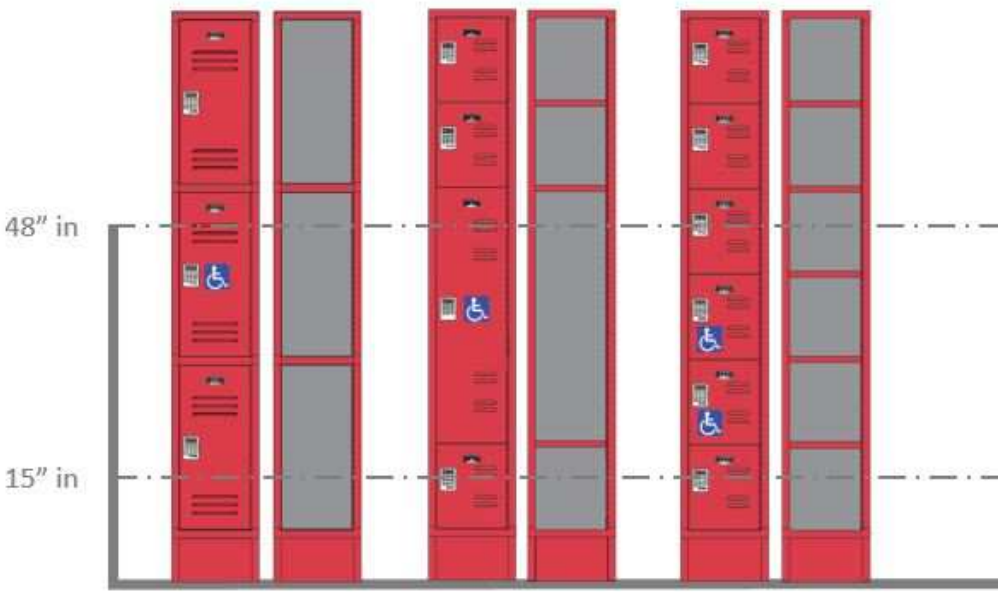

Lockers for Children

Children's use describes spaces and elements specifically designed for use primarily by people 12 years old and younger.

Chapter 3 Building Blocks

308 Reach Ranges

A table found under the 308.1 advisory provides guidance on forward and side reach ranges for children for building elements such as lockers that are designed for use primarily by children.

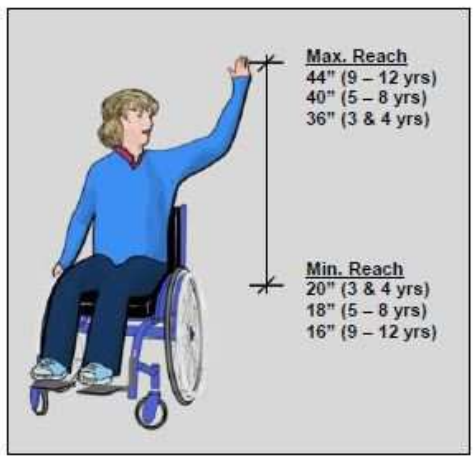



Locks

Lockers are more than just storage units. In most cases, they are also required to keep property safe. People are forced to carry their belongings with them if lockers are not available and/or if the locker cannot protect their possessions.

Unfortunately, not all locker designs can accommodate all locking options, and not all locking options provide the same level of security, ease of functionality, or lock management. Lock selection may also be determined by the type and use of the locker area: temporary or permanent.

- **Temporary use** locks are designed for **shared-usage** environments where the lockers are used for a short period of time (single-use) by multiple users throughout the day.
- **Permanent use** locks are designed for **assigned-usage** environments where the locker is accessed multiple times throughout the day or week by one individual over a specified period of time, e.g. school year.

The next few slides show a few examples of ADA compliant locks that are suitable for shared-use or assigned-use lockers. It's important to remember, even if a locker's physical location and interior design is ADA compliant, it becomes a non-compliant locker if a non-compliant ADA lock is used to lock it.

ADA Compliant Locks

Traditional built-in key-only locks are commonly designed to work on single-point horizontal latch or lift handle lockers. To achieve ADA compliance (usable with one hand and not requiring tight grasping, pinching, or twisting of the wrist, or more than 5 lbf to operate) larger flat-head keys that are easy to grip and insert into the lock are used. Some manufacturers may provide key head covers that can convert a standard-sized cut key into an ADA compliant user key. To access the locker, a user simply inserts the key to unlock and then lifts the locker's ADA compliant handle. To lock the locker, the user can simply close the door and remove the key.

Built-in combination locks that can also be operated with an ADA compliant key are ideal for use in schools since the lock looks like all the other combination locks in the locker row—an important consideration that supports a school's inclusion program. If the ADA user key is not required, the lock may be operated like any other combination lock.



Please remember the **exam password HANDLE**. You will be required to enter it in order to proceed with the online examination.

Example: ADA Compliant Lock with Button Key

Locks that operate by touching a button key to a front contact pin eliminate the need for pinching, grasping, or turning of the wrist to operate the lock. The lock also uses both audio and visual indicators to accommodate the visually and hearing impaired.

This lock installation is ideal for assigned-usage environments and easily managed with a programming button key unique to the lock system. Each user button key carries a unique digital identification that eliminates key duplication and unauthorized access.

This type of locking system uses a ½" deadbolt or deadlatch and is designed for metal lockers, including lockers with lift handles and vertical lock bars, box lockers, and most single-point latch lockers. When a user touches the assigned button key to the lock, the deadbolt or deadlatch moves horizontally and retracts for ten seconds, providing a user with ample time to open the locker door before the bolt extends. When the user closes the door, the lock automatically locks.



User button key



Motorized deadbolt and motorized deadlatch

Example: ADA Compliant Keypad Lock

Electronic or battery operated keypad locks are designed for assigned- or shared-usage environments, either where the lock is operated with one assigned code, or where users can enter their own four-digit code with each use. When unlocked, shared-use locks will remain unlocked until locked by another user. Lock management is accomplished with a manager bypass key. Depending on the manufacturer, the interface for a keypad lock may contain a key slot to operate the lock with an ADA compliant user key.





user key
ADA compliant

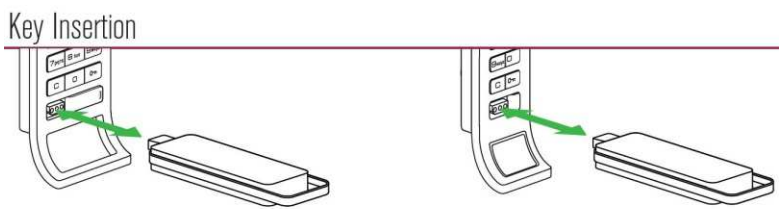

Example: ADA Compliant Keypad Cam Lock

Electronic or battery operated keypad cam locks are also designed for assigned- or shared-usage environments, either where the lock is operated with one assigned code, or where users can enter their own four-digit code or ADA compliant user key with each use. To lock, the user enters a code or ADA key and then rotates the ADA compliant handle to the locked position. To unlock, the user simply enters the same code or key and then rotates the handle to the unlocked position.

Cam locking mechanisms offer higher levels of security because the locking mechanism engages the locker frame by manual operation of the turn handle. It's important to pay attention to the lever required to turn the cam, as this must be easy to operate; a small lever or knob generally takes more than 5 lbs of force.

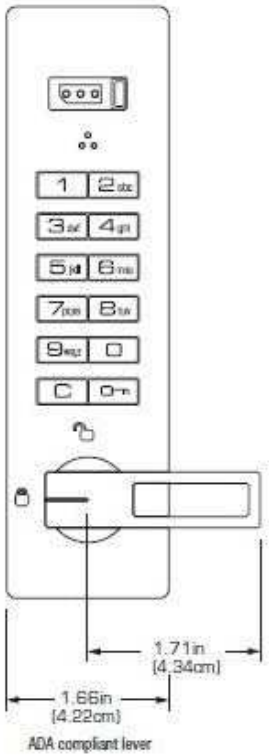



user key
ADA compliant



Example: ADA Compliant RFID Lock

Radio frequency identification (RFID) locks function by utilizing radio-wave communication and LED usage indicators, and are designed for assigned- or shared-usage environments. In assigned-use functionality, an RFID card is assigned to operate the lock. The user presents the assigned RFID card to unlock and closes the door to automatically lock. In shared-use functionality, the user chooses any available locker and presents any RFID card to lock and unlock. Once unlocked, the locker is available for a different user. Depending on the manufacturer, audible indicators may be an option, and the RFID lock's interface may contain a key slot to operate the lock with an ADA compliant user key. `







user key
ADA compliant

Example: ADA Compliant RFID Cam Lock

RFID cam locks provide locker security with the presentation of an RFID card and rotation of the handle. Once again, it's important to pay attention to the lever required to turn the cam as this must be easy to operate; a small lever or knob generally takes more than 5 lbs of force.

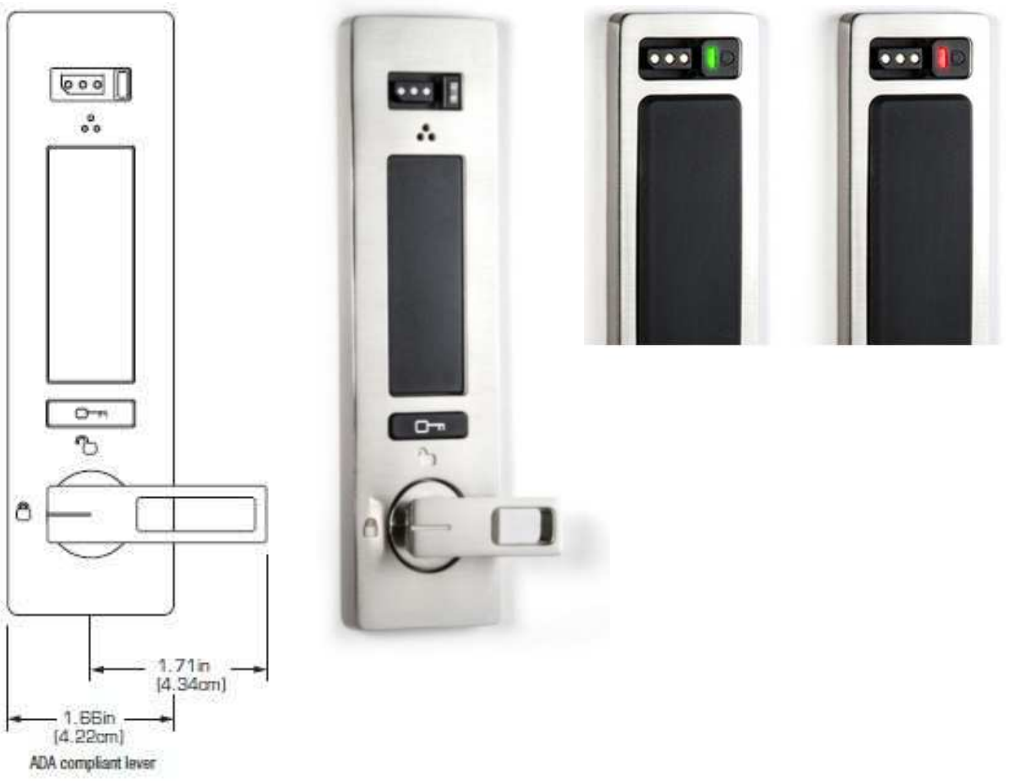



Resources

Resources

- *ADA Home Page.* U.S. Department of Justice (DOJ), n.d. Web. Accessed October 2015.
    - "Effective Date. Compliance Date." February 2011. Web. Accessed October 2015.
    - "ADA Update: A Primer for State and Local Governments." 8 June 2015. Web. Accessed October 2015.
    - "2010 ADA Standards for Accessible Design." September 15, 2010. Web. Accessed October 2015.
    - "Guidance on the 2010 ADA Standards for Accessible Design." 15 September 2010. Web. Accessed October 2015.
- ADA Live. "Episode 23: Back to School—What Parents Need to Know Before the School Year Begins." Southeast ADA Center, 5 August 2015. Web. Accessed October 2015.
- ADA National Network. "ADA Fact Sheets." ADA National Network, n.d. Web. Accessed October 2015.
- Atwood, Emily. "Efficient Locker Room Design Maximizes Use of Small Spaces." *Athletic Business*, December 2011. Web. Accessed October 2015.
- Brown, Nicholas. "Lock Specification is Key to Locker Room Design." *Athletic Business*, January 2011. Web. Accessed October 2015.
- "Code of Federal Regulations (CFR)." U.S. National Archives and Records Administration, n.d. Web. Accessed October 2015.
- Fischbach, Amy Florence. "New ADA Standards Could Affect Health Club Locker Rooms." *Club Industry*, 1 June 2011. Web. Accessed October 2015.
- *New England ADA Center*. ADA National Network, 2015. Web. Accessed October 2015.
    - "Comparison—2010 and 1991 ADA Standards for Accessible Design—Scoping Requirements." N.d. Web. Accessed October 2015.
    - "Comparison—2010 and 1991 ADA Standards for Accessible Design—Technical Requirements." N.d. Web. Accessed October 2015.
- Steinbach, Paul. "How Lock Technologies Are Simplifying Shared-Use Operations." *Athletic Business*, July 2015. Web. Accessed October 2015.

Resources

- *U.S. Access Board.* A Federal Agency Committed to Accessible Design. N.d. Web. Accessed October 2015.
  - "Americans with Disabilities Act (ADA) Accessibility Guidelines for Buildings and Facilities (ADAAG)." N.d. Web. Accessed October 2015.
  - Architectural Barriers Act (ABA) Standards. 2015. Web. Accessed October 2015.
  - "Guide to the ADA Standards, Chapters 1-4." N.d. Web. Accessed October 2015.
  - "Guidelines and Standards, Recreation Facilities. Dressing, Fitting, or Locker Rooms." N.d. Web. Accessed October 2015.

Conclusion

If you desire AIA/CES, state licensing or CE credits for another organization, please click on the button to commence your online examination. A score of 80% or better will allow you to print your Certificate of Completion; you may also go to your AEC Daily Transcript to see your completed courses and certificates.

For additional knowledge and post-seminar assistance, click on the Ask an Expert link above.

If you have colleagues that might benefit from this seminar, please let them know. Feel free to revisit the AEC Daily website to download additional programs from the Online Learning Center.

MORE ›

powered by www.aecdaily.com @AECDAILY

Digilock® security simplified™

©2015 Digilock. The material contained in this course was researched, assembled, and produced by Digilock and remains its property. Questions or concerns about the content of this course should be directed to the program instructor. This multimedia product is the copyright of AEC Daily.

Questions?
Ask an Expert – click here

Click Here to Take the Test

Exit